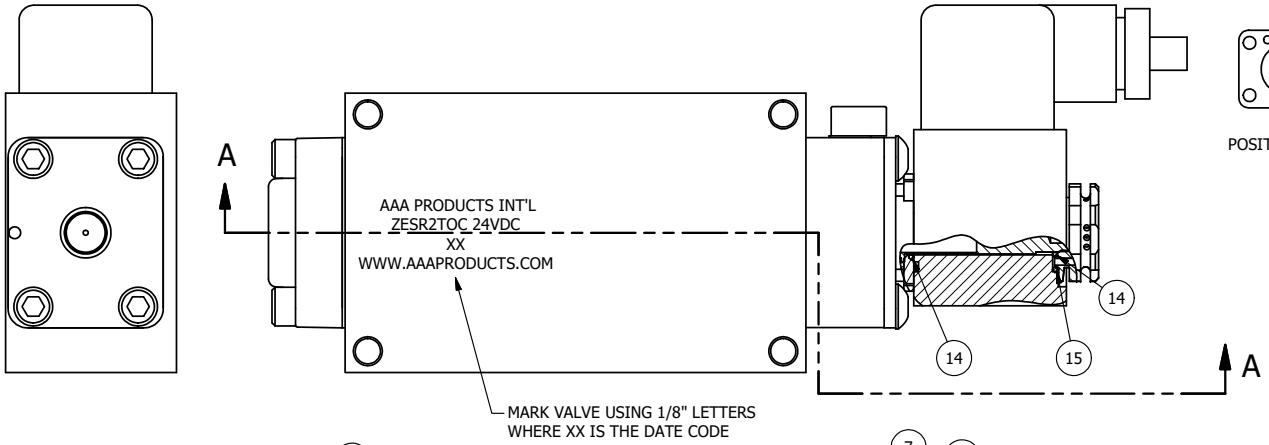


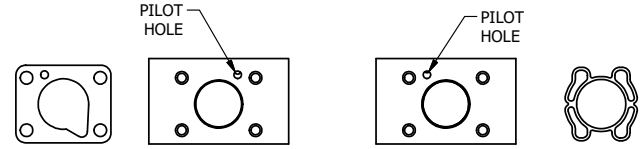


POSITION GASKET TO SEAL PILOT HOLE
SIDE 'B' ONLY.

ALIGN PILOT AND SLOT IN ADAPTOR
WITH GASKET IN BETWEEN SIDE 'A' ONLY
FOR EXTERNAL PILOT OPERATION - ROTATE ADAPTOR
180 DEGREES. REMOVE 1/8" NPTF PLUG AND
SUPPLY 50-150 PSI TO 1/8" NPTF PILOT PORT IN ADAPTOR.

NOTES:
1) ALWAYS GIVE VALVE MODEL AND PART NUMBER WHEN ORDERING PARTS.
2) FOR DIFFERENT VOLTAGES OTHER THAN 24VDC, CONSULT FACTORY.

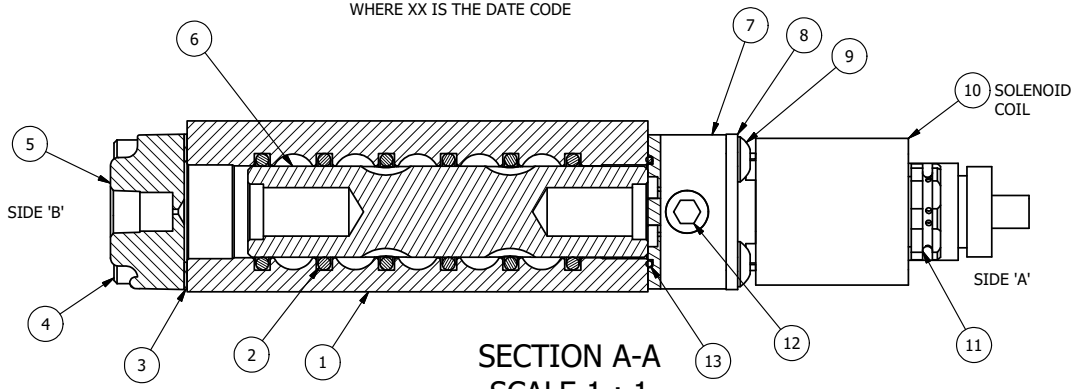


SECTION A-A
SCALE 1 : 1
VIEW FROM 3 PORT SIDE

| FLG | QTY | PART NO | DESCRIPTION |
|---|---|---|---|
| 15 | 1 | V-607 | O-RING, VITON, 75 DURO, 14MM X 1MM, IP67 NUT SEAL |
| 14 | 2 | V-606 | O-RING, VITON, 75 DURO, 8MM X 1MM, IP67 STEM SEAL |
| 13 | 1 | EMG3 | GASKET - END MOUNT SOLENOID, BUNA-N, 1/4" & 3/8" VALVES |
| 12 | 1 | V-19-SS | PLUG, SOCKET PIPE 1/8"-27 NPT, 7/8 TAPER, PLAIN, FLUSH SEAL, STAINLESS STEEL |
| 11 | 1 | V-562 | NUT, SOLENOID, SIDE EXHAUST |
| 10 | 1 | V-612-3 | ATEX COIL 24 VDC WITH 3 METER CORD. NASS # 1215 30.1-001/6896. |
| 9 | 4 | V-584-SS | SCREW, 10-24 X 1, BUTTON HEAD SOCKET CAP, 18-8 OR 303 SS |
| 8 | 1 | SEC3-7 | PLATE, RE-INFORCEMENT, SOLENOID, STAMPED, 304 STAINLESS |
| 7 | 1 | V-599-1 | SOL OPER, END MOUNT, LOCKING O'RIDE |
| 6 | 1 | S3R | SPOOL - SOLID, STANDARD, 2 POS, CLSD CTR, 1/4" & 3/8" VALVE |
| 5 | 1 | PEC3-11 | END CAP, PILOT, STAINLESS STEEL, 1/4" & 3/8" VALVE |
| 4 | 4 | V-38-SS | SCREW, 10-24 X 3/4, SOCKET HEAD CAP, 18-8 SS |
| 3 | 1 | ECG3 | GASKET - END CAP, 1/4" & 3/8" VALVE |
| 2 | 6 | V-39 | O-RING, VITON, STD BODY, 1/4" & 3/8" VALVES |
| 1 | 1 | ZB2-1 | BODY - BRASS, UPPER PILOTS (BUTTON BLEEDER), 1/4" SIDE PORT VALVE |

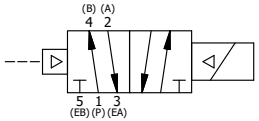


| | | | |
|---|---|---|---|
| LIMITS ON DIMENSIONS UNLESS OTHERWISE SPECIFIED | 2-PL DECIMAL ± .01<br>3-PL DECIMAL ± .005<br>FRACTIONAL ± 1/64<br>ANGULAR ± 1/2' | AAA PRODUCTS INTERNATIONAL | **AAA PRODUCTS INTERNATIONAL**<br>**7114 Harry Hines Blvd**<br>**Dallas, TX 75235** |
| DRAWN: RMcKenna | DATE: 4/12/2017 | CHECKED: KWaite | DATE: 4/12/2017 |
| SCALE: 1 : 1 | SHEET: 1 OF 1 | RELEASED: HWomack | DATE: 4/12/2017 |
| TITLE: 1/4" SIDE PORT, SNGL SOL, 2 POS, FRCTN POS, PLT RTRN, ATEX, 24VDC, BRASS & SS, LCKNG OVRD, SIDE VENT | | PART NO.: ZESR2TOC 24VDC | REV.: |

THE INFORMATION CONTAINED WITHIN THIS DOCUMENT IS PROPRIETARY TO AAA PRODUCTS AND MAY NOT BE DISCLOSED WITHOUT PRIOR WRITTEN CONSENT

D:\Engineering\Product\Valves\Assembly\Standard\ESR\DWG\ZESR2TOC 24VDC.dw